KRUEGER

JOB NAME _____
ENGINEER _____
CONTRACTOR _____
TAG _____

KHGP

HORIZONTAL HIGH PERFORMANCE FAN COIL UNIT, SERIES A
COOLING AND ELECTRIC HEAT W/MIXING BOX

SUBMITTAL SHEET

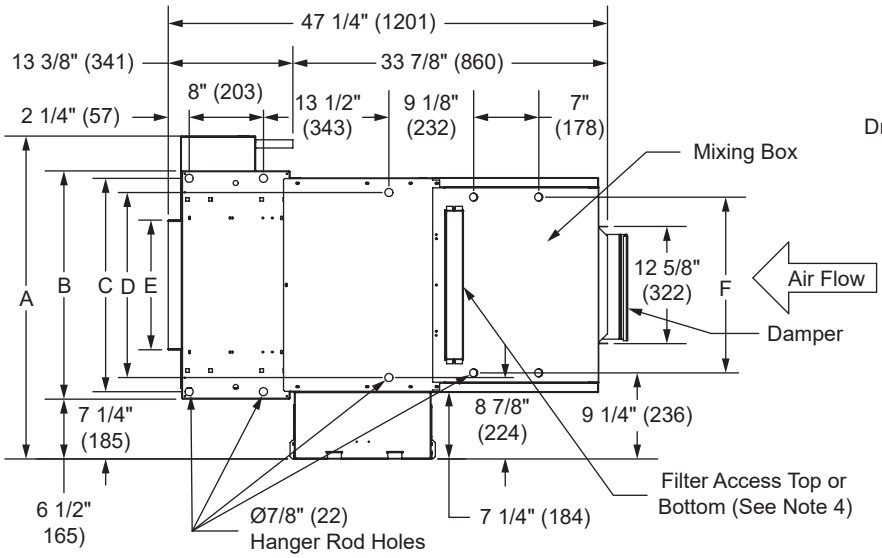

TOP VIEW

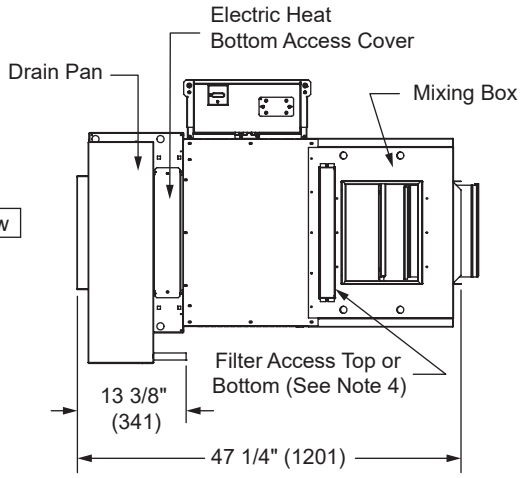

BOTTOM VIEW

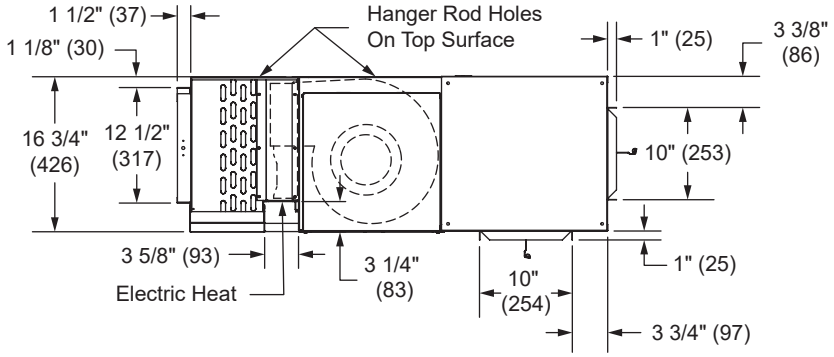

SIDE VIEW

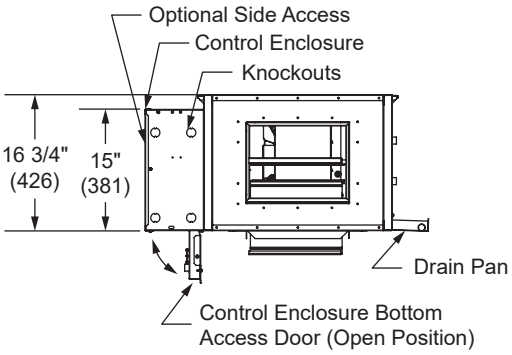

BACK VIEW

DIMENSIONS						
UNIT SIZE	A	B	C	D	E	F
06	34-7/8" (886)	24-5/8" (721)	23-1/8" (587)	20" (508)	14" (356)	19" (483)
08	39-7/8" (1013)	29-5/8" (737)	28-1/8" (714)	25" (635)	19" (483)	24" (610)
10	43-7/8" (1114)	33-5/8" (838)	32-1/8" (816)	29" (737)	23" (584)	28" (711)
12	48-7/8" (1241)	38-5/8" (965)	37-1/8" (943)	34" (864)	28" (711)	33" (838)
14	53-7/8" (1368)	43-5/8" (1092)	42-1/8" (1070)	39" (991)	33" (838)	38" (965)
16	58-7/8" (1495)	48-5/8" (1219)	47-1/8" (1197)	44" (1118)	38" (965)	43" (1092)
18	63-7/8" (1622)	53-5/8" (1346)	52-1/8" (1324)	49" (1245)	43" (1092)	48" (1219)
20	67-7/8" (1724)	57-5/8" (1448)	56-1/8" (1426)	53" (1346)	47" (1194)	52" (1321)

NOTES:

1. All dimensions in Inches (millimeters). All dimensions ±1/4" (6mm). Metric values are soft conversion.
2. Right hand unit shown, Left hand unit opposite.
3. Standard control enclosure is mounted on unit side opposite cooling coil connections and includes (4) knockouts on (2) sides. Provide sufficient clearance to access electrical controls and comply with applicable codes and ordinances.
4. No Side Filter Access with Mixing Box.

Product information is subject to change without notice.